NextAIRE

# NextAIRE

Next Generation AI Researchers for Air Quality Excellence

Funded by
the European Union

NextAIRE

# Agenda

- Wireless Sensor Nodes
- Embedded Systems
- Communication Interfaces
- Hands-On Labs

Funded by
the European Union

# (Wireless) Sensor Nodes

**A little bit of history:**

- PicoRadio Project @Berkeley Wireless Research Center [*].
- World-famous: MOTE!
  - Atmega 128L Microcontroller
  - CC1000 Radio Transceiver
  - 4Mbit External Flash
  - Power Regulation MAX1678
  - 51 Pin I/O Expansion Connector (Digital, 8 Analog, 8 Programming lines)

**[*] Rabaey, J. M. et al, PicoRadio supports ad hoc ultra-low power wireless networking.**

Funded by
the European Union

# (Wireless) Sensor Nodes

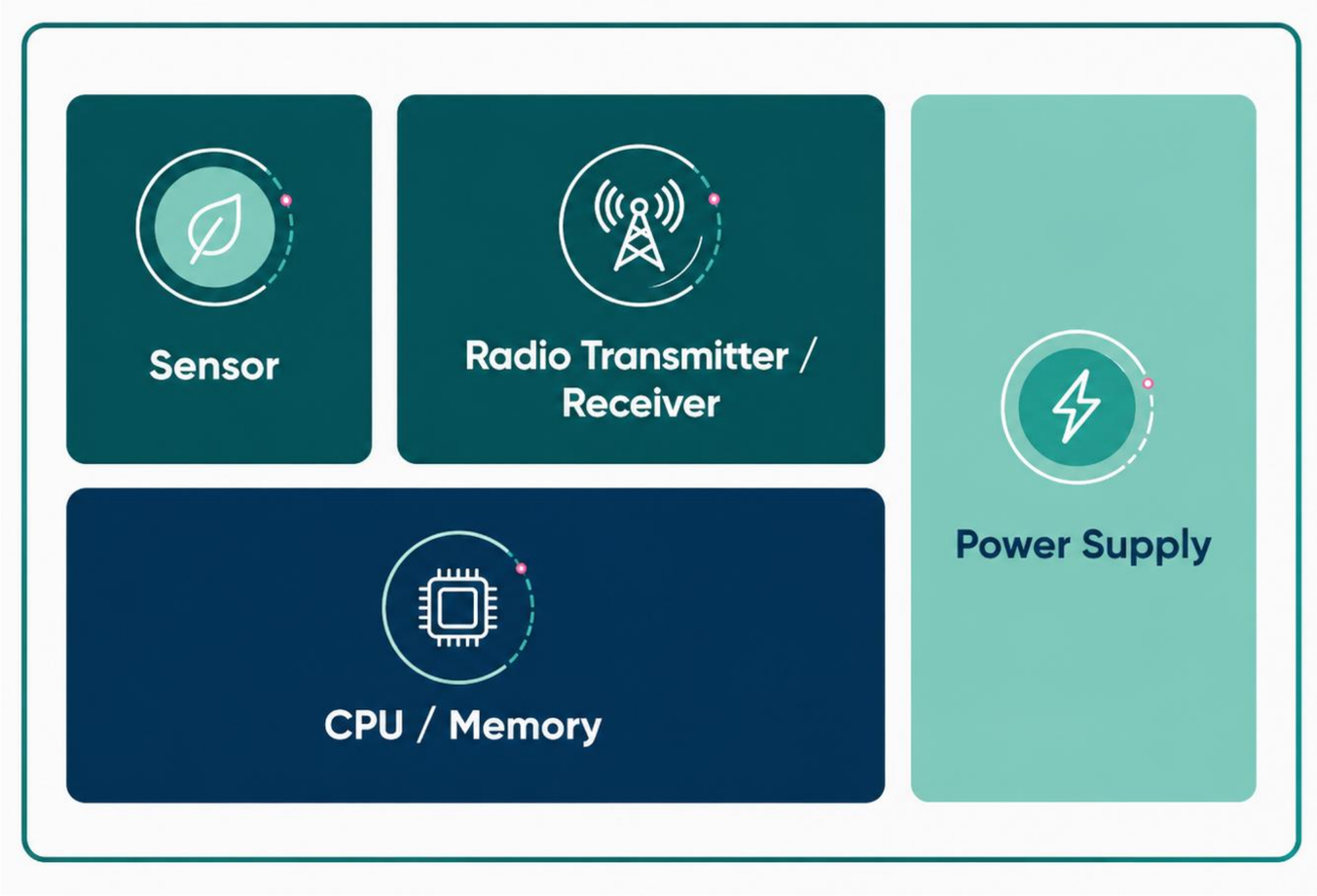


Funded by
the European Union

# (Wireless) Sensor Nodes

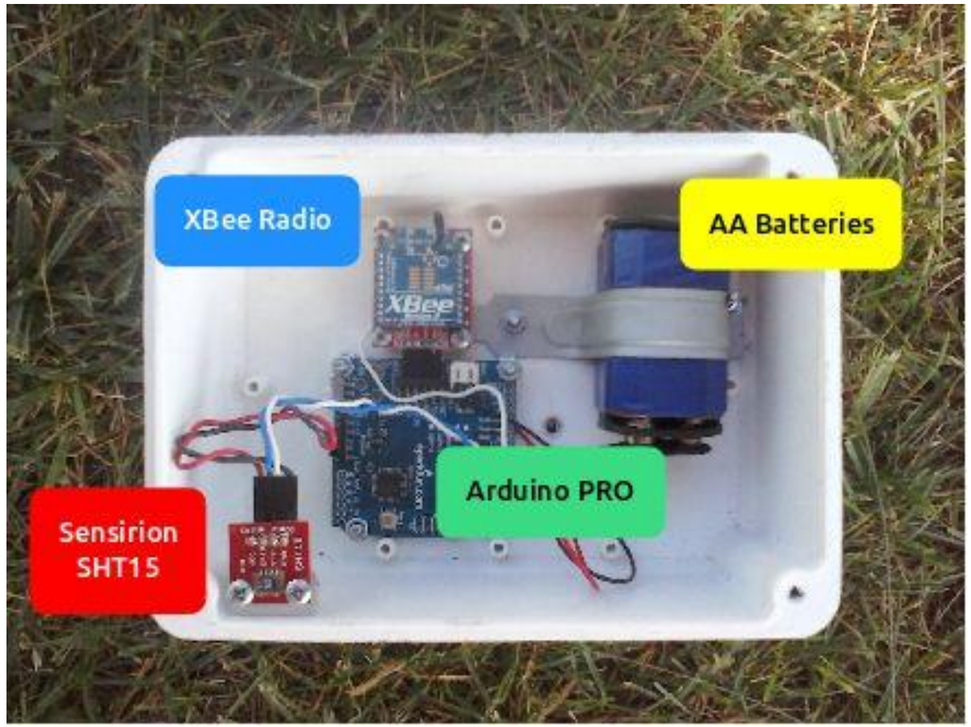


Funded by
the European Union

# (Wireless) Sensor Nodes

**Goal: to cover large outdoor areas without maintenance.**

- Low energy consumption.
- Limited processing and memory resources.
- Low-power communication protocol.
- “On-the-fly” reprogramming.

Funded by
the European Union

NextAIRE

# Micro

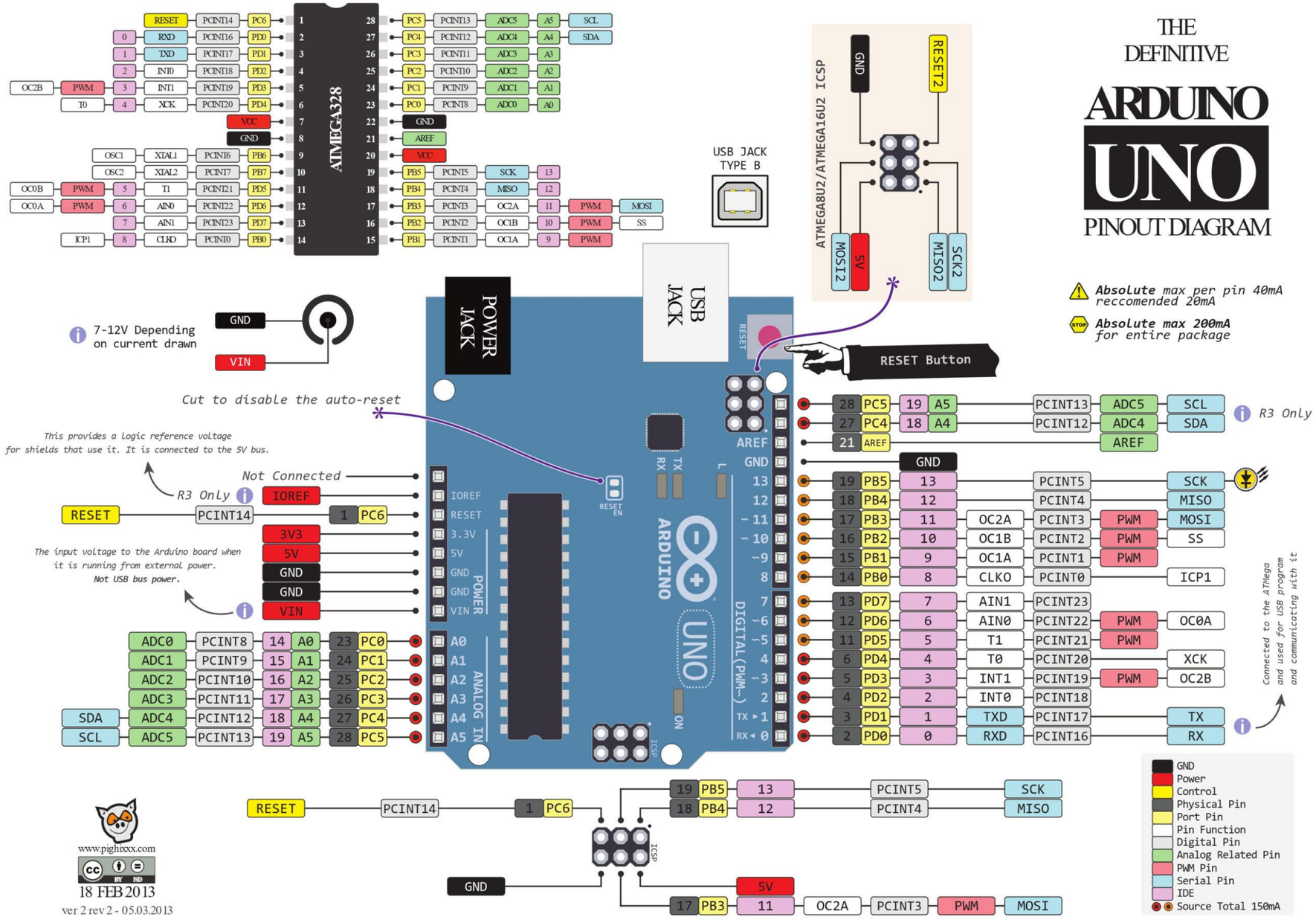


Funded by the European Union

# Wired Communication

## UART (Universal Asynchronous Receiver-Transmitter)

- TTL Levels (5 or 3,3V)
- TX/RX cables (communication)

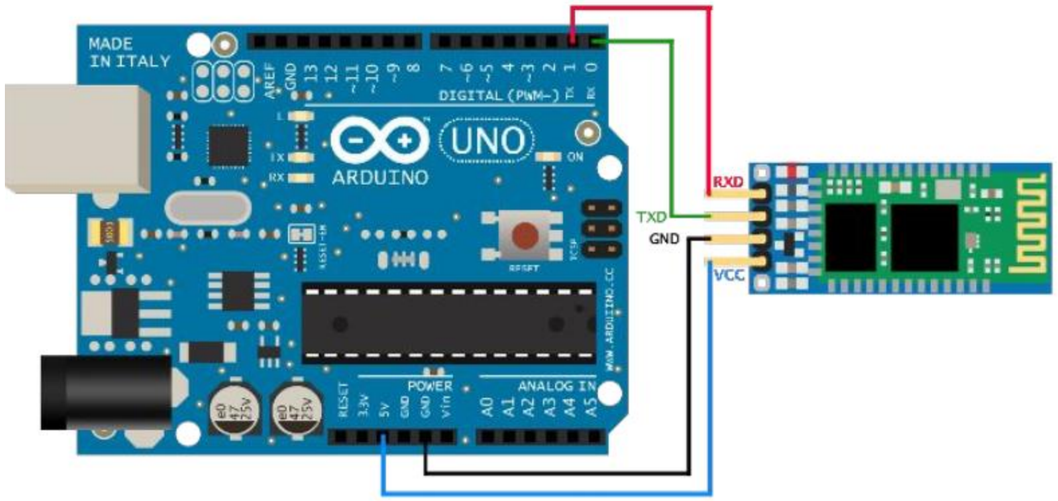


https://www.arduino.cc/reference/en/language/functions/communication/serial/

Funded by the European Union

# Wired Communication

**I2C (Inter-Integrated Circuit)**

- Master-Slave bus
- Data transfer is always initiated by a master; the slave reacts.
- It is possible to have **several masters** using a multi-master mode, in which **two masters can communicate with each othe**r, so that one of them acts as a slave.
- Arbitration (access control on the bus) governed by the specifications, allowing the **masters to take turns.**

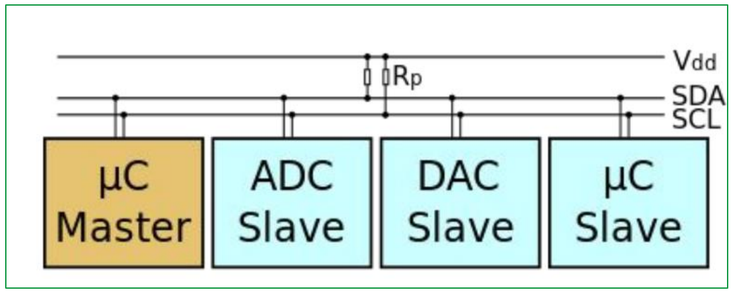


https://www.arduino.cc/en/Reference/Wire

Funded by
the European Union

# Hands-on Labs: UART

## Reading a value from a button / sensor

- Example: DigitalReadSerial.ino

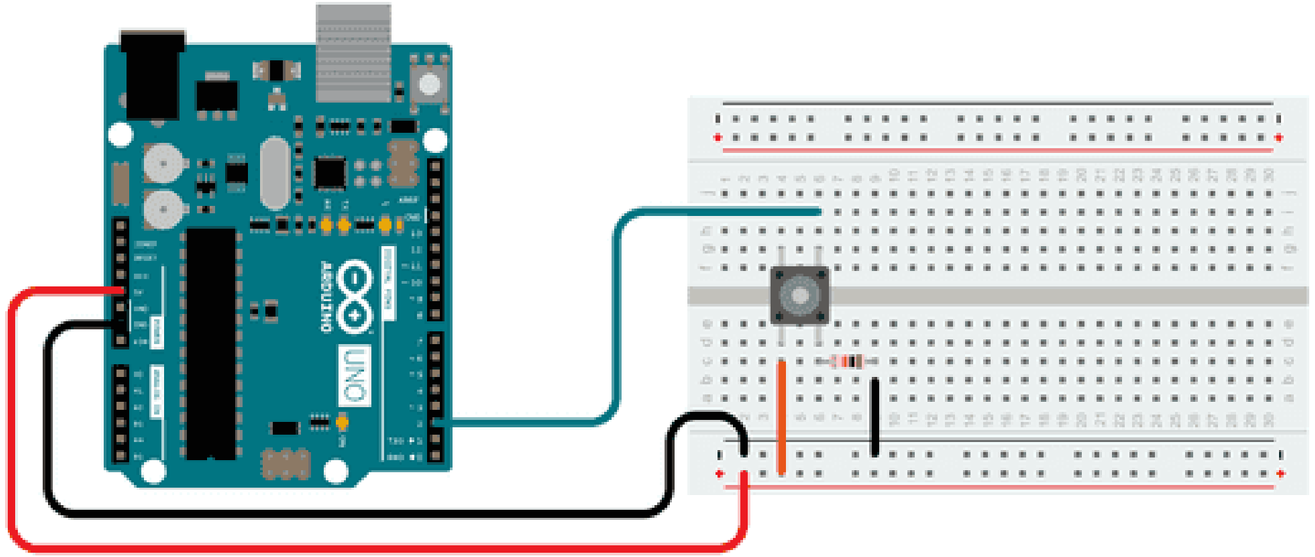

Funded by
the European Union

# Hands-on Labs: Arduino to Arduino via UART

**Communication between embedded systems**

- Digital I/O: 10(RX) and 11 (TX) on each Arduino
- Example:
  - Transmitter.ino
  - Receiver.ino
  - **Bonus:** change code to writte a 2 binary on 3 leds in the receiver

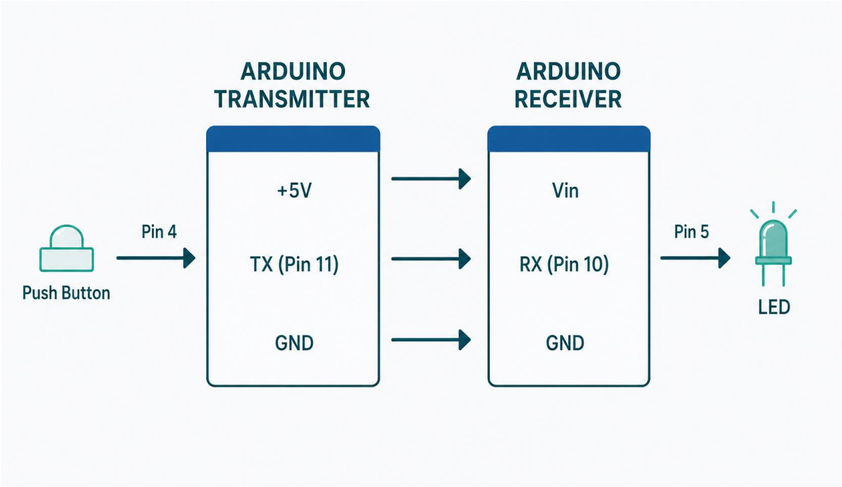


Funded by the European Union

# Hands-on Labs: I2C

**Communication via I2C**

- I2C bus requires only two wires to operate: CLK and SDA.
- Each device → address → access the device individually. Address can be set by hardware or software.
- Each device → unique address.
- When several similar devices are used, their addresses must be changed, or a secondary bus must be implemented.
- The master device initiates communication with the slaves and can send data to, or receive data from, the slaves.
- Slave devices cannot initiate communication.

Funded by
the European Union

# Hands-on Labs: I2C

## Communication via I2C

- 7 bits → address of the slave device we want to communicate with.
- One remaining bit → send or receive information.
- One acknowledgment bit.
- One or more bytes → data.
- One acknowledgment bit.

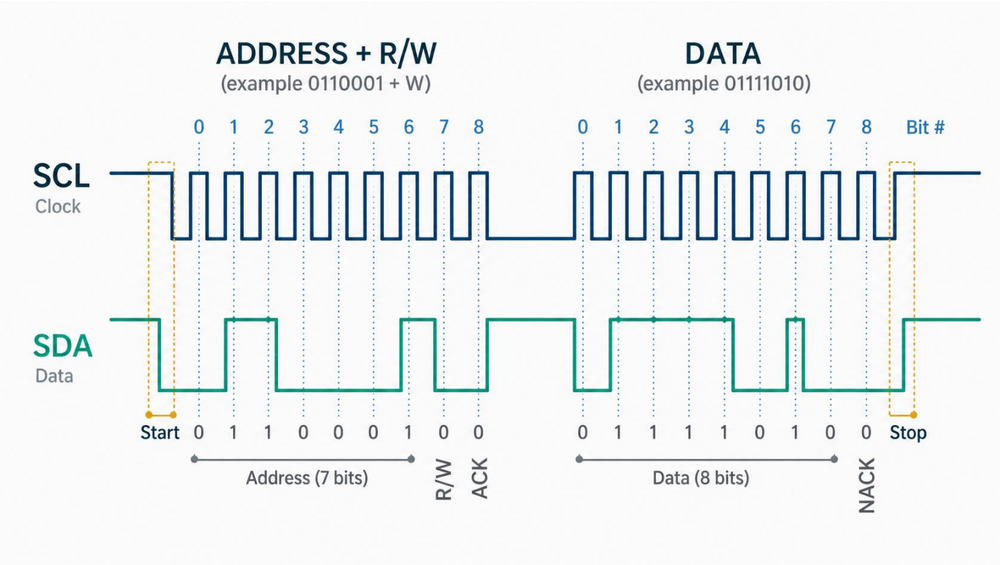


Funded by
the European Union

# Hands-on Labs: I2C

## Code

- Master.ino
- Slave.ino

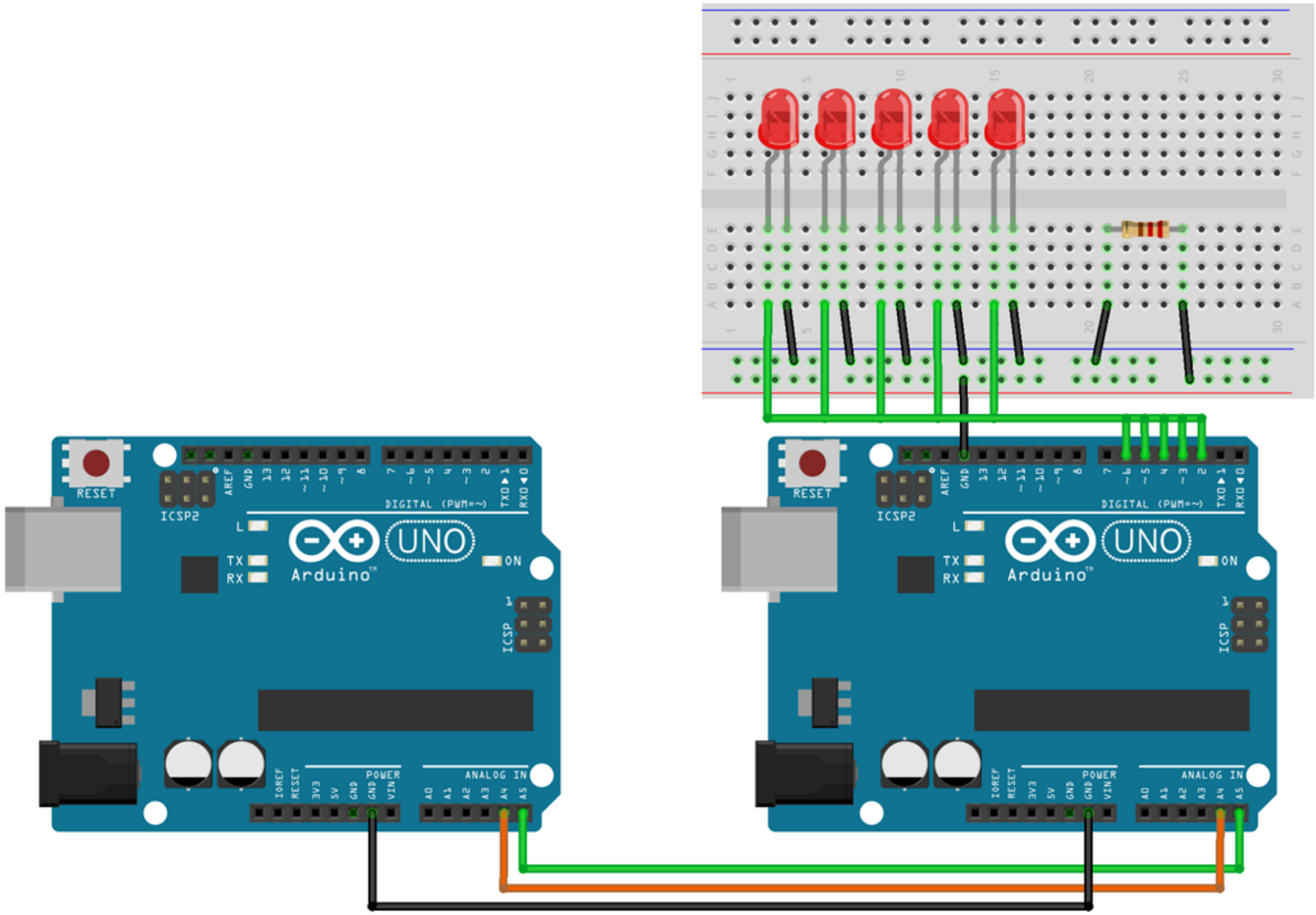


Funded by
the European Union

# Hands-on Labs: Temperature & Humidity

**A very low-cost sensor: DHT22**

- Temperature measurement from -40 to 125°C, with an accuracy of 0.5°C.
- Humidity measurement from 0 to 100%, with an accuracy of 2–5%.
- Sampling frequency of 2 samples per second (2 Hz).

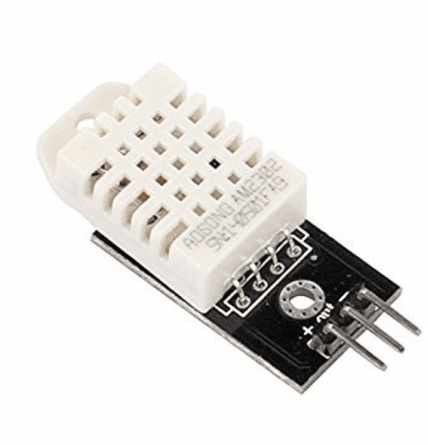

Funded by
the European Union

# Hands-on Labs: Temperature & Humidity

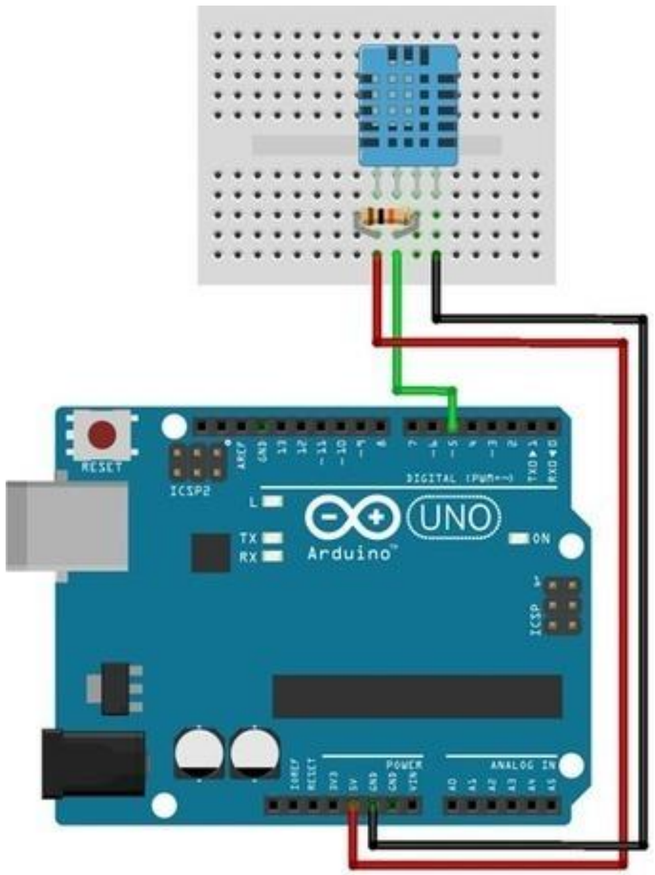


Funded by
the European Union

# Hands-on Labs: Temperature & Humidity

**The DHT22 uses a bidirectional, single-wire communication protocol based on timed signals.**

**For each measurement, the sensor sends 40 bits in about 4 ms:**

- 16 bits for humidity
- 16 bits for temperature
- 8 bits for error checking / checksum

Funded by
the European Union

# Hands-on Labs: Temperature & Humidity

**In detail:**

- 8-bit integral RH data
- 8-bit decimal RH data
- 8-bit integral temperature data
- 8-bit decimal temperature data
- 8-bit checksum

**See the datasheet for full timing details.**

Funded by
the European Union

# Hands-on Labs: Temperature & Humidity

**Software**

- Arduino Library for DHT22: https://github.com/adafruit/DHT-sensor-library
- Code: dht22.ino

Funded by
the European Union

NextAIRE

# Consortium

Ascalia

diadikasia
BRIGHT GROUP MEMBER

smartsense

Megasense

CENTER FOR PHYSICAL SCIENCES AND TECHNOLOGY

INSTITUTE FOR ANTHROPOLOGICAL RESEARCH

theLisbonCouncil
think tank for the 21st century

INAR
Institute for Atmospheric and Earth System Research

imi

msensis

vito

KNOW Center

DHMZ

UNIVERSITAS UNIVERZITET SARAJEVU STUDIORUM SARAJEVOENSIS

DEMOKRITOS

FERIT
FACULTY OF ELECTRICAL ENGINEERING, COMPUTER SCIENCE AND INFORMATION TECHNOLOGY OSIJEK

Funded by
the European Union

# Thank You!

**Name: Lucas Iacono & Heimo Gursch**

**Organization: Know Center Research GmbH**

**Email: {liacono, hgursch} @know-center.at**

**Website**: www.know-center.at

NextAIRE

Funded by
the European Union